aumann

nokra

shaft inspection

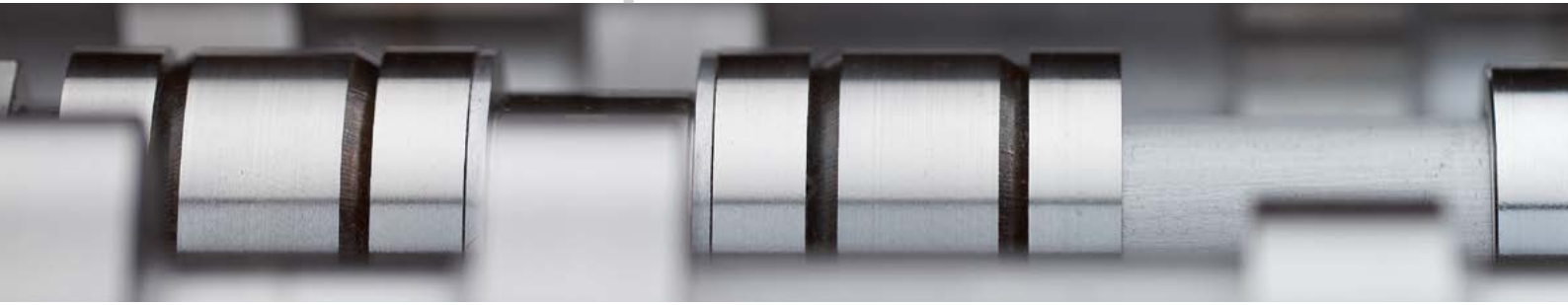

flexibility · inline · precision

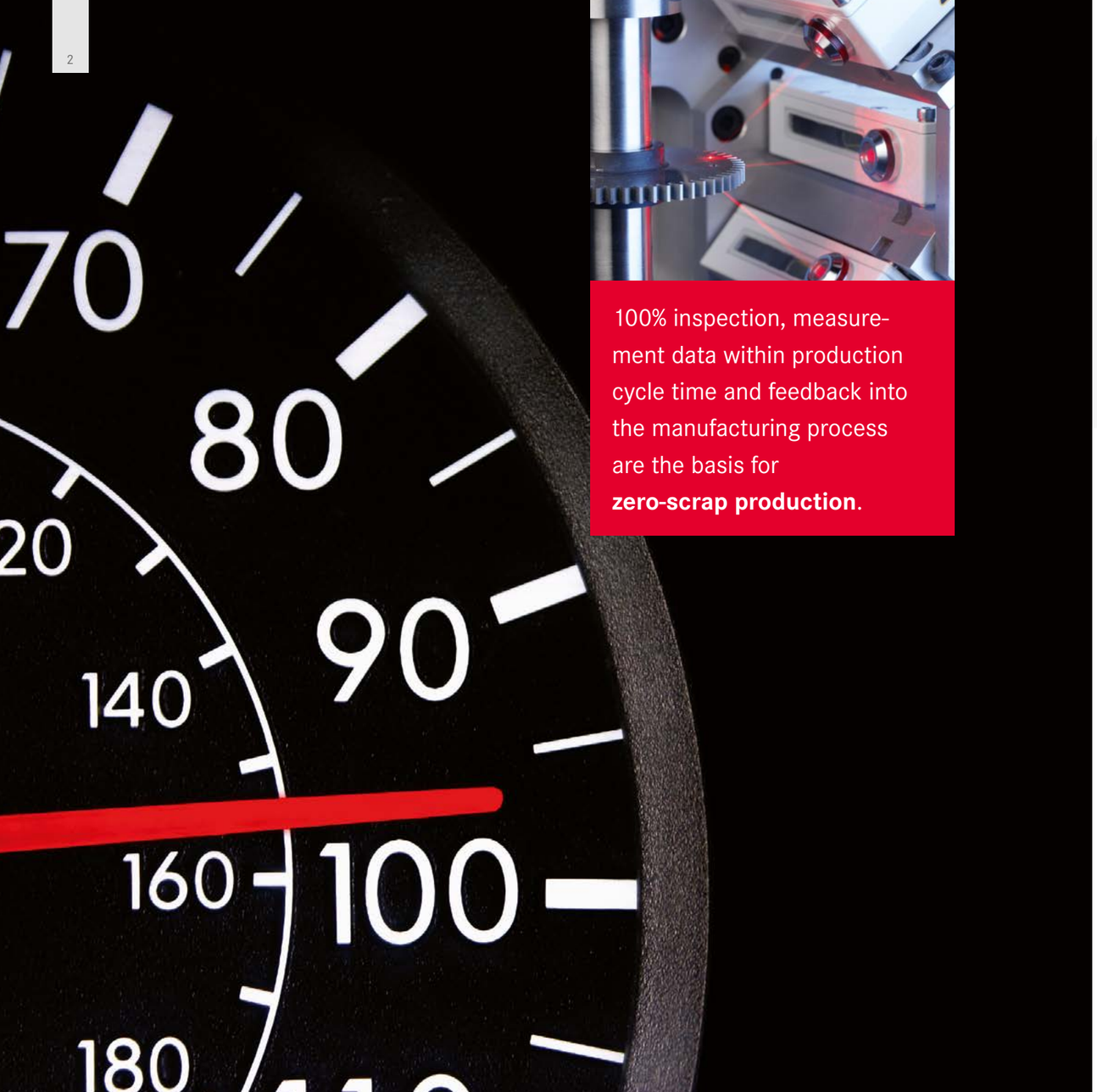

100% inspection, measurement data within production cycle time and feedback into the manufacturing process are the basis for **zero-scrap production**.

flexibi

flexibility · inline · precision

Competitive advantage: laser measurement

A 100% inspection within production cycle time and the automated feedback of measurement values into the manufacturing process are critical for persistence in the market. nokra provides highly sophisticated inline measurement for rotating parts which are perfectly adapted to the demanding measurement requirements of automated production. The contact free laser measurement device alpha.si is based on the principle of optical laser triangulation. For this, laser light is directed on the surface of the measured part and the scattered light is detected optically. Within the laser distance sensor, the signal is transformed into an exact geometrical distance. Depending on requirements, this can be done in one, two or three dimensions. Our long years of experience, our innovative interdisciplinary team, and our cooperation with our partner Aumann Beelen GmbH ensure that our measurement devices are constantly refined and are up to speed technologically.

For high quality and increased productivity

nokra laser measurement devices alpha.si allow an extensive check of the geometrical features of a shaft within seconds, directly within the production line. The measurement data, which are provided within the cycle-time of the production process, allow a comprehensive documentation of all geometric features according to quality assurance requirements and can also be used directly to optimize the manufacturing process. Trends are observed, deviations are detected and upstream manufacturing steps can be readjusted. Therefore, scrap can be systematically prevented at an early stage. This forms the basis for a zero-scrap production.

Consequently, the 100% inspection within production cycle time helps to improve manufacturing processes and increase productivity. nokra measurement devices open up a considerable potential for savings. Fast amortization of investments is ensured.

inline measurement device

The inline measurement device alpha.si by nokra means flexibility. It can be configured for new measurement tasks without mechanical changeover, resulting in flexibility and durability.

Application in serial production

An industrial robot handles the loading and unloading of shafts into the measurement device during inline inspection. After the shaft has been clamped between two cones, it is rotated for the measurement and gets scanned by at least three laser sensors. The laser beams are directed onto the shaft from different angles. This measurement method allows – among others – the measurement of grooves, sensor wheels, concave contours and other special features without specialized clamping devices.

A machine bed made of granite and integrated compensating algorithms lead to high long term stability with regard to influences from the production environment. Overall, such a measurement device checks about 1 million parts per year.

60 measuring characteristics
in a few seconds
and millions within a year ...
Efficiency induced
by inline measurement.

Measurement task

One device for all characteristics

The high complexity of the measurement task during inline inspection of shafts is caused by the high number of characteristics to be checked and the low cycle time of the manufacturing process.

nokra measurement devices can check all relevant characteristics with the required precision inline within production cycle time. For example, 60 geometrical features can be validated within seconds.

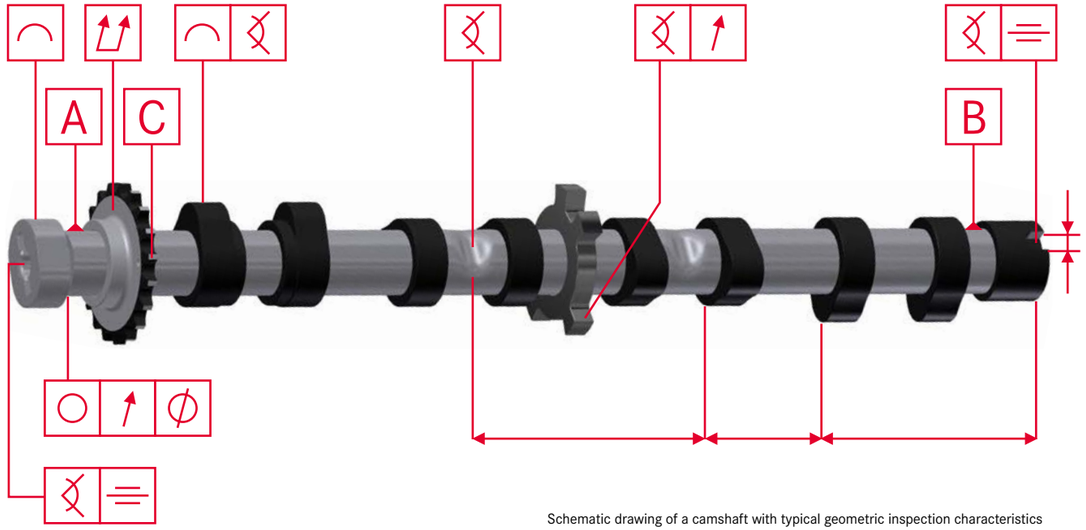

Schematic drawing of a camshaft with typical geometric inspection characteristics

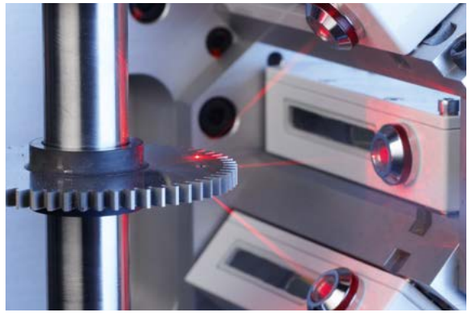

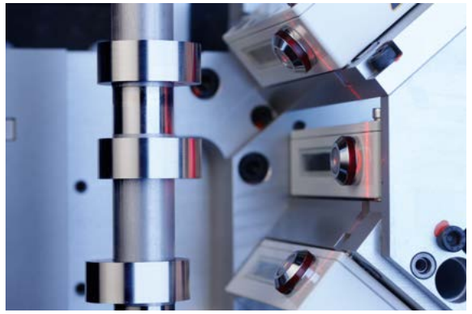

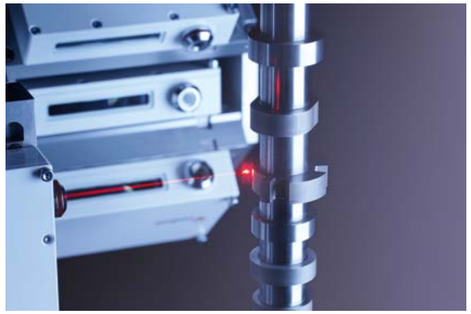

Resulution	
Length/Diameter:	0,1 µm
Angle:	0,001°

Spectrum of assembly	
Length of shaft:	up to 800 mm[1]
Diameter:	150 mm
Workpiece:	< 30 kg

Measuring precision (1σ, typical values)	
Length:	0,3 µm
Diameter:	0,6 µm
Angle:	0,005°
Shape deviation:	0,8 µm
Roundness:	0,3 µm
Radial run-out:	0,4 µm
Axial run-out:	0,4 µm

Clamping devices
coded standardized cones (RFID)
hydraulic expansion chuck (optional)

Laser sensors	
Measurement range:	20 mm
Measuring uncertainty:	0,01% of the measurement range

[1]Different dimensions can be realized upon request.

Test plan, technology, precision

Range of functions of the measurement device

To ensure constantly precise measurements, nokra measurement devices are designed according to the highest technological state of the art:

- flexibility: measurement of all characteristics without changeover parts or specialized clamping devices
- absolute measurements and automatic adjustment of the measurement device using a calibrated ajustment shaft
- measuring system analysis, e.g. according to Measurement System Analysis Standard (MSA)
- short time of measurement due to high sensor measurement frequency
- optimized laser sensors for difficult surfaces
- coded clamping cones to prevent mix-ups (RFID)
- temperature sensors within the measurement device allow automatic adaptation to environmental conditions
- easy integration via Profibus interface
- standardized data storage: measurement and test results stored according to QS-Stat standard
- machine bed made of granite: minimized influence of temperature and vibrations, a guarantee for high measurement precision and availability of the measurement device

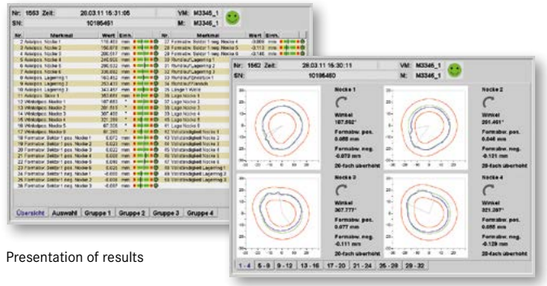

Presentation of results

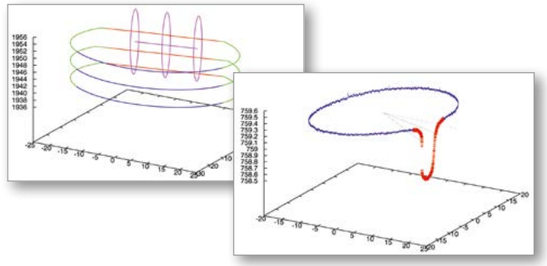

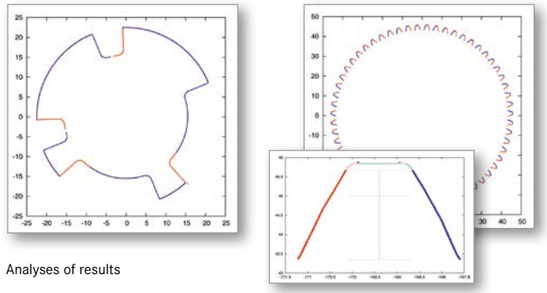

Analyses of results

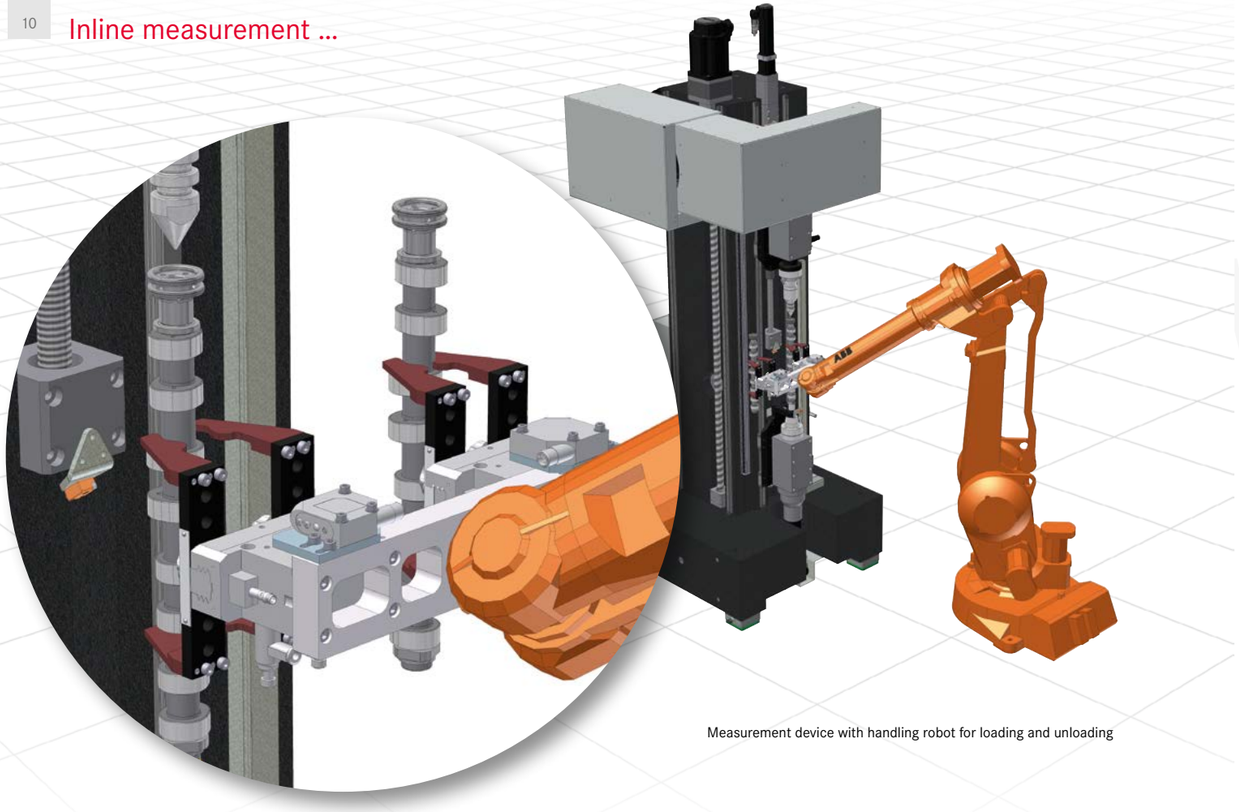

Measurement device with handling robot for loading and unloading

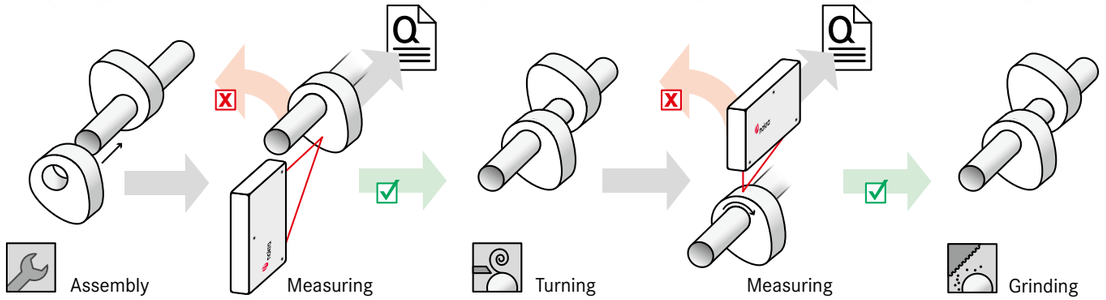

Measurement within the assembly line

Inline measurement

Due to their high technological sophistication, nokra measurement devices can be integrated into the production line even under difficult conditions. The contact free laser measurement in combination with flexible handling systems such as robots allow minimization of tool changeover time and maintenance costs while at the same time providing high flexibility for different product variants.

The measurement data, which are provided within the cycle-time of the production process, allow a comprehensive documentation of all geometric features according to quality assurance requirements and can also be used directly to optimize the manufacturing process. By using the measurement data within a closed loop control circuit for upstream manufacturing systems scrap can be prevented at and early stage.

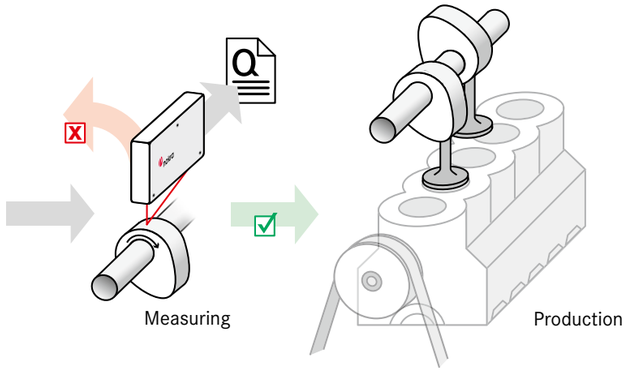

Application of nokra measurement devices within the production chain

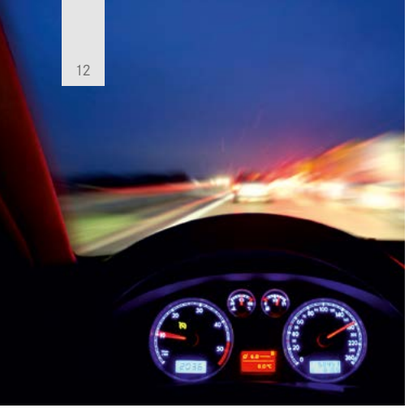

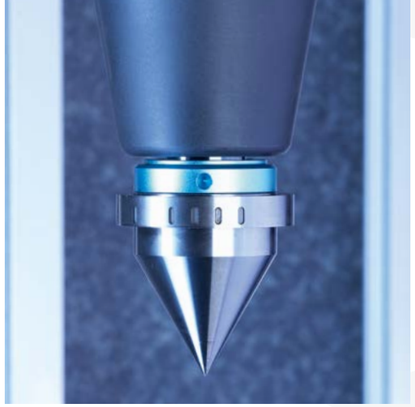

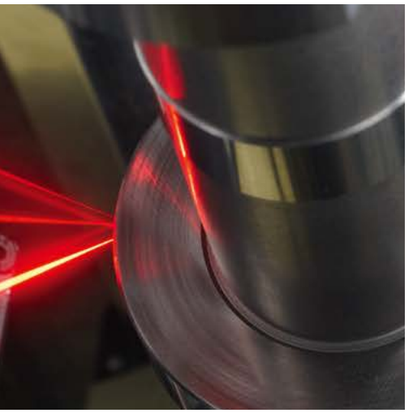

"Coming together
is a beginning;
keeping together is progress;
working together is success."

Henry Ford (1863-1947)

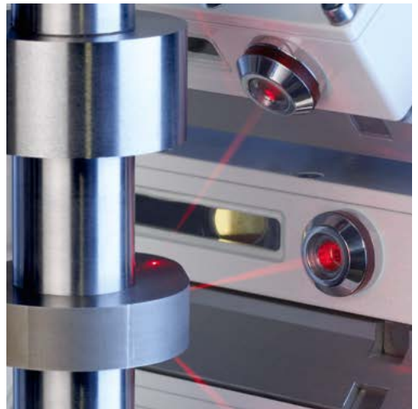

Customer focus

Adaptation and integration

Each measurement device is adapted to the different tasks by the specialists of nokra. Whether stand-alone or process-integrated, software and hardware are optimized for the respective application and integrated into the production environment of the customer. In accordance with the project and service orientated organizational structure of nokra and aumann Beelen we give advice and support from planning up to realization and operation of a production line.

Accessories

- Coded cones for clamping in various designs
- Reader for barcode or data matrix code
- Calibrated master parts for automatic adjustment and calibration
- Handling systems incl. gripper

"Another quality characteristic: nokra systems and sensors are developed and produced in Germany exclusively."

– Günter Lauven, Managing Director nokra –

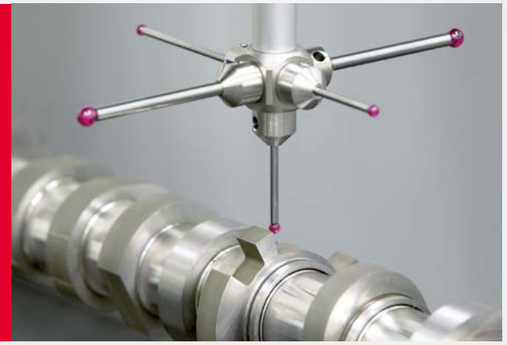

Quality & Know-how

Managing Director Dipl.-Ing. Günter Lauven

Made in Germany

nokra Optische Prüftechnik und Automation GmbH is an internationally operating company which provides high-class measurement and inspection devices for operation in steel, aluminium and automotive industry. nokra laser sensors and automated inspection systems are designed, developed and manufactured at our company headquarters in Germany. Our internal processes are defined in accordance with internationally recognized quality standards. nokra is certified in accordance to ISO 9001 since 1995, and OHSAS 18001 since 2014.

All components are examined with state-of-the-art metrology techniques upon receipt. Specialized personnel assemble and adjust the measurement devices. In the test bay, the features are checked and documented according to established standards.

nokra has established itself internationally with installations of our measurement devices in Europe, America and Asia. Initial operation, customer training and service are carried out by nokra employees worldwide.

nokra

Optische Prüftechnik
und Automation GmbH

Robert-Koch-Straße 6 · 52499 Baesweiler · Germany
Phone +49 (0) 2401/60 77-0 · Fax +49 (0) 2401/60 77-11
www.nokra.de · info@nokra.de

aumann

Aumann Beelen GmbH
Dieselstraße 6 · 48361 Beelen · Germany
Telefon +49 (0) 2586/88 8-0 · Fax +49 (0) 2586/88 8-71 00
www.aumann.com · info@aumann.com

11.2018 - INT - www.etcetera.de